Good Stays

Solar container power station inspection form

Powered by Good Stays

Solar container power station inspection form

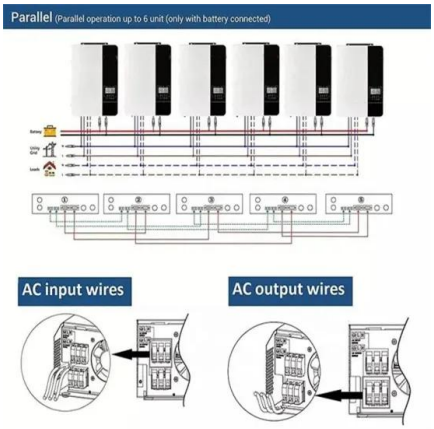

Basic Solar PV Field Inspection Checklist

If connection is made within the panelboard, ensure that the overcurrent protection is located at opposite end of bus from utility supply IF the sum of the current from both the PV and grid source exceed ...

PV System Inspections Checklist

Instructions: Workshop attendees will be visiting a grid-connected PV system site. Attendees will break into groups and inspecting the system. Only one worksheet is required to be completed per group. ...

Solar PV Post-Evaluation Checklist

Confirm the system power output under actual conditions meets expected output. Actual performance should be within about 5% of expected STC power. This procedure includes system nameplate ...

CONTAINER INSPECTION CHECKLIST

We recommend conducting a scheduled technical inspection of solar power plants twice a year. Special tools allow us to easily inspect your solar panels and pinpoint a large number of problems. [pdf]

Inspection and maintenance checklist solar energy systems

Inspection and maintenance checklists should be completed by the electrician performing the inspection, and a copy given to the owner for their records. Owners should keep records of all inspections and ...

Solar System Inspection Checklist 9 , PDF

The document is a checklist for inspecting a residential solar photovoltaic system. It includes sections to check the functionality of the monitoring system, assess the ...

Solar Permitting Guidebook 4th Edition

3 These sections recommend a streamlined local permitting process for small, simple solar PV and solar water heating installations (including both solar domestic water Part heating ...

SOLAR PHOTOVOLTAIC INSPECTION CHECKLIST

Filling out the Solar Photovoltaic Inspection Checklist is an important step in ensuring the safety and efficiency of solar installations. This guide provides clear and detailed instructions on how to ...

Solar Inspection Checklist

Do we have a copy of the plans? What is the PTO date? If a string inverter system, haw many optimizers are there? Does PTO date match monitoring? Are arrays mapped correctly? How many error ...

SOLAR PV PLANT Commissioning Forms For PV

This document contains forms for commissioning photovoltaic (PV) systems, including general system data, technical specifications, wiring diagrams, operation and maintenance information, additional ...

Solar pv maintenance checklist pdf: Fill out & sign online , DocHub

Click 'Get Form' to open the solar installation checklist PDF in the editor. Begin by entering the customer name and address in the designated fields at the top of the form. Ensure accuracy as this information ...

MODEL INSPECTION CHECKLIST

In order to make this Model useful to as many jurisdictions as possible, IREC has drafted the requirements using relevant national code sections that are generally used as a starting point for ...

Permitting and Inspection for Rooftop Solar , Department of Energy

Solar permitting and inspection refer to two processes that need to happen before a solar array can receive permission to interconnect to the grid and start producing electricity.

PV System Inspections Checklist

grid-connected PV system site. Attendees will break into g. oups and inspecting the system. Only one worksheet is req. ed to be completed per group. Each group will first record the system design and ...

Sustainable Technologies Evaluation Program (STEP)

IEC 61557 and IEC 61010 provide guidance on the measuring instruments and monitoring equipment and methods that are appropriate for the inspection and testing of PV systems.

Inspection Checklist Guide for PV Systems in One

SECTION 2 - Comprehensive Reference: This reference details items that may be relevant in the field inspection of rooftop PV systems that comply with the comprehensive or simplified versions of the ...

Solar Maintenance Checklist Template: Complete with ...

Solar Pv Maintenance Checklist PDF. Check out how easy it is to complete and eSign documents online using fillable templates and a powerful editor. Get ...

Free Solar PV Commissioning Checklist in PDF

Free AC Solar System Installation and Commissioning checklist template to ensure complete, standardized setup for photovoltaic systems. This tool helps installers ...

Solar Access Inspection

The purpose of this inspection document is to provide local Weatherization Assistance personnel with some type of guidance on how to inspect and determine a site's feasibility for solar system installation.

Field Service Management Template & Checklists

Efficient and accurate site inspections are crucial for the success of your solar service operations. Our Sample Solar Site Inspection Form is designed to help you streamline your inspection process, ...

CONTAINER INSPECTION CHECKLIST

Daily inspection contents of solar container power station Completeness of the documentation and its correspondence with the REG system on-site, as per SEC's inspection checklist.

Inspection and Testing Guidelines for Large-Scale Solar

4.1.3 Special considerations for Solar PV systems with module level electronics For systems constructed using AC modules, power optimizers or with any other form of module level electronics, Table 1 shall ...

Solar PV Post-Evaluation Checklist

Confirm the system power output under actual conditions meets expected output. Actual performance should be within about 5% of expected STC power. This procedure includes system nameplate ...

Contact Us

For catalog requests, pricing, or partnerships, please visit:
https://www.goodstays.co.za